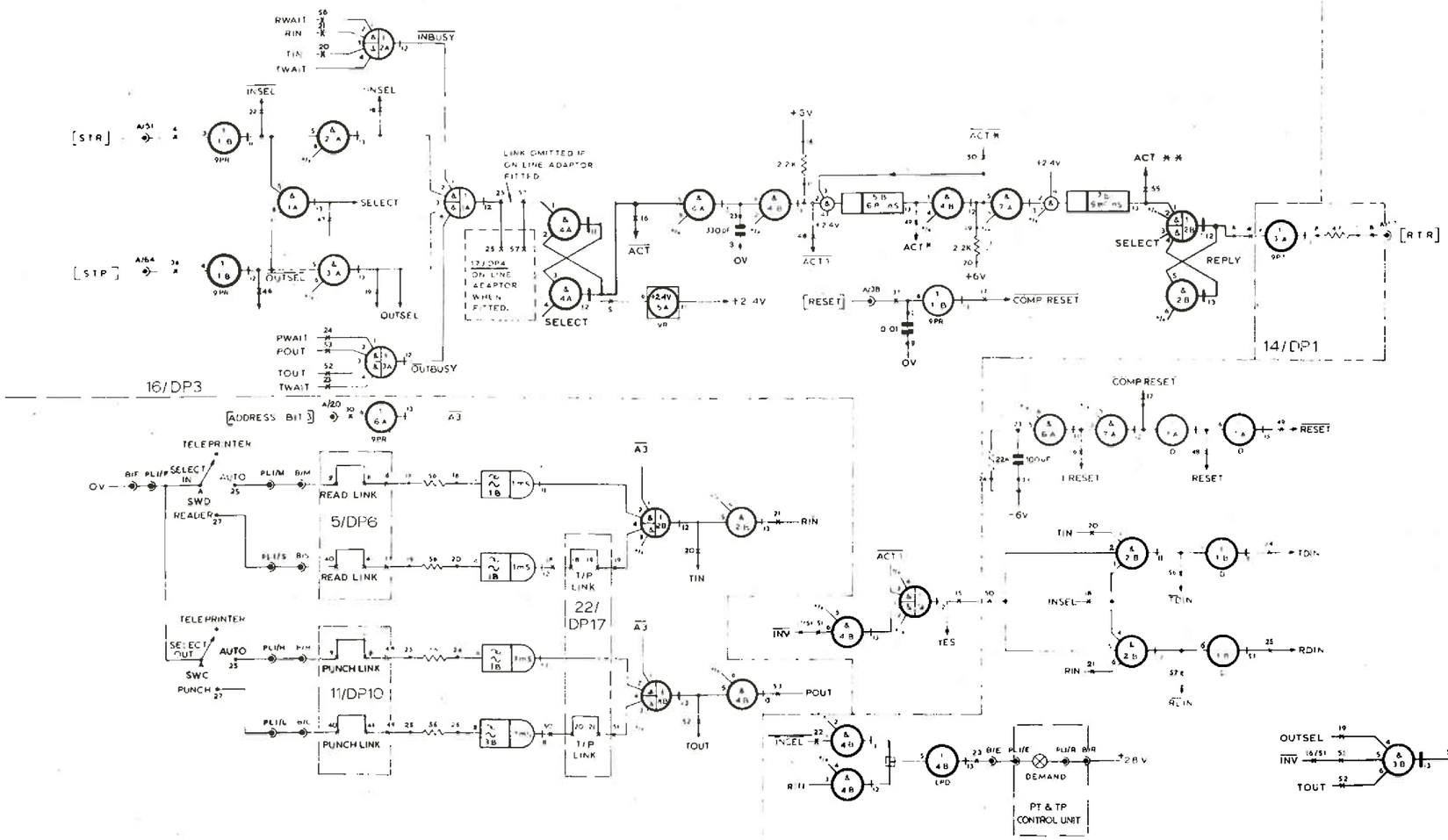

NOTE: "/" INDICATES "NOT CONNECTED"

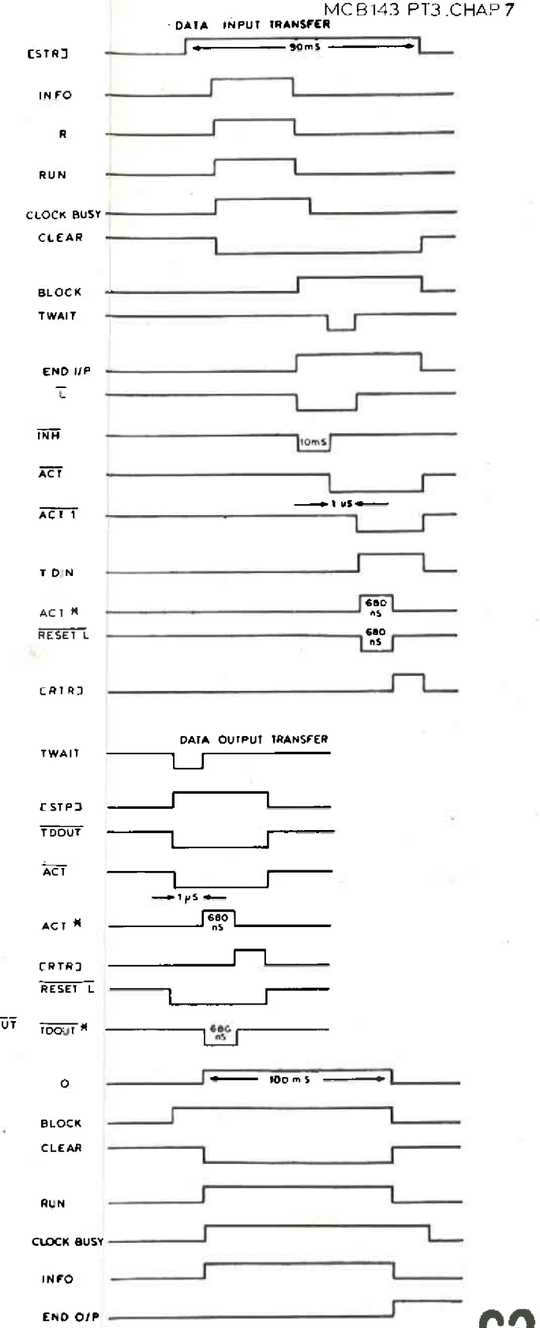

PAPER TAPE STATION MCB66
TELEPRINTER SELECTION & TIMING
ISSUE 3

C28

322 TD015