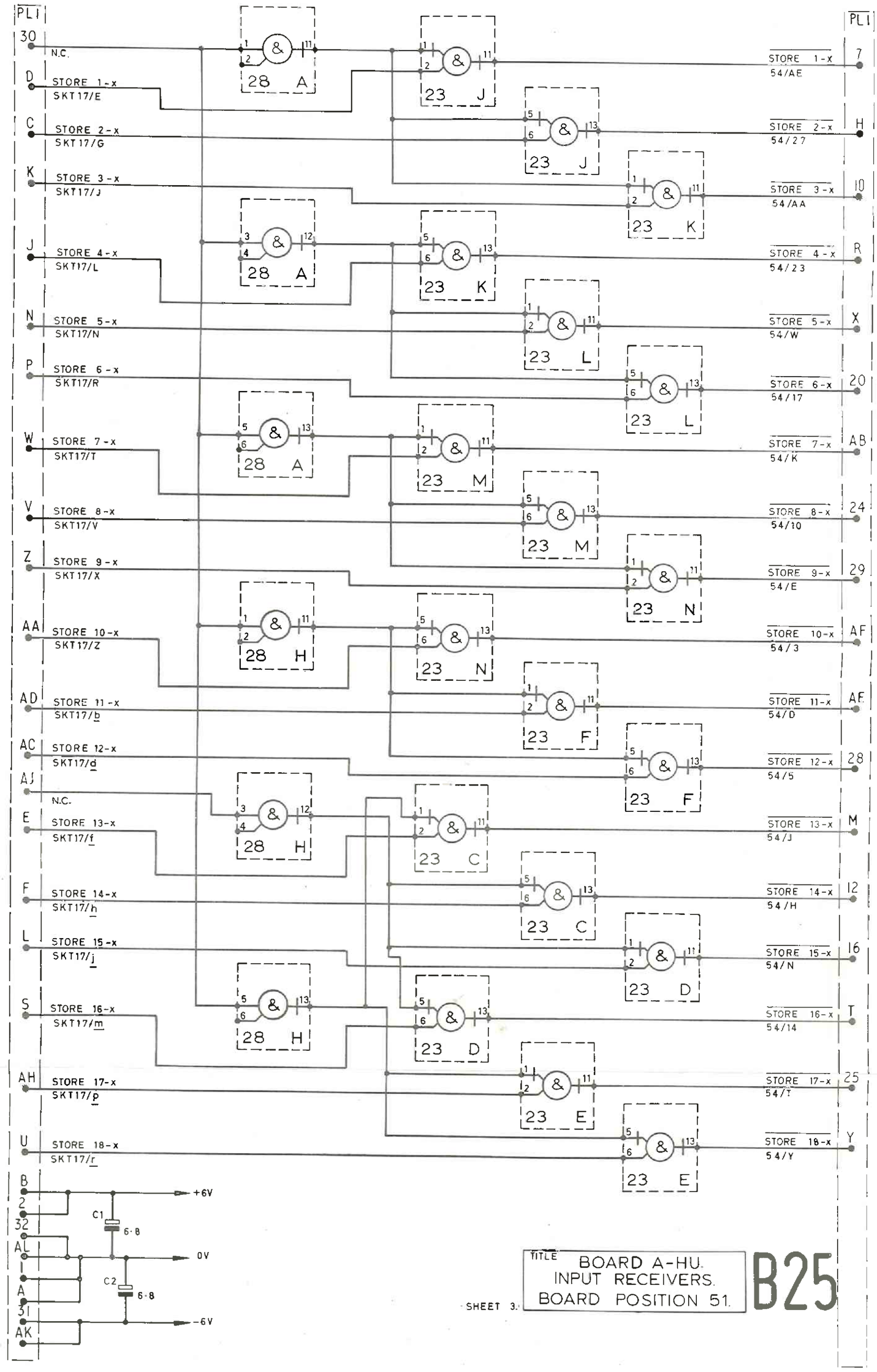
PL1
30
N.C.
D
STORE 1-x
SKT17/E
C
STORE 2-x
SKT17/G
K
STORE 3-x
SKT17/J
J
STORE 4-x
SKT17/L
N
STORE 5-x
SKT17/N
P
STORE 6-x
SKT17/R
W
STORE 7-x
SKT17/T
V
STORE 8-x
SKT17/V
Z
STORE 9-x
SKT17/X
AA
STORE 10-x
SKT17/Z
AD
STORE 11-x
SKT17/b
AC
STORE 12-x
SKT17/d
AJ
N.C.
E
STORE 13-x
SKT17/f
F
STORE 14-x
SKT17/h
L
STORE 15-x
SKT17/j
S
STORE 16-x
SKT17/m
AH
STORE 17-x
SKT17/p
U
STORE 18-x
SKT17/r
28 A
28 A
28 A
28 H
28 H
28 H
23 J
23 J
23 K
23 K
23 L
23 L
23 M
23 M
23 N
23 N
23 F
23 F
23 C
23 C
23 D
23 D
23 E
23 E
STORE 1-x
54/AE
STORE 2-x
54/27
STORE 3-x
54/AA
STORE 4-x
54/23
STORE 5-x
54/W
STORE 6-x
54/17
STORE 7-x
54/K
STORE 8-x
54/10
STORE 9-x
54/E
STORE 10-x
54/3
STORE 11-x
54/D
STORE 12-x
54/5
STORE 13-x
54/J
STORE 14-x
54/H
STORE 15-x
54/N
STORE 16-x
54/14
STORE 17-x
54/T
STORE 18-x
54/Y
7
H
10
R
X
20
AB
24
29
AF
AE
28
M
12
16
T
25
Y
B
2
32
AL
1
A
31
AK
C1
6·8
C2
6·8
+6V
0V
-6V
TITLE
BOARD A-HU.
INPUT RECEIVERS.
BOARD POSITION 51.
SHEET 3.
B25