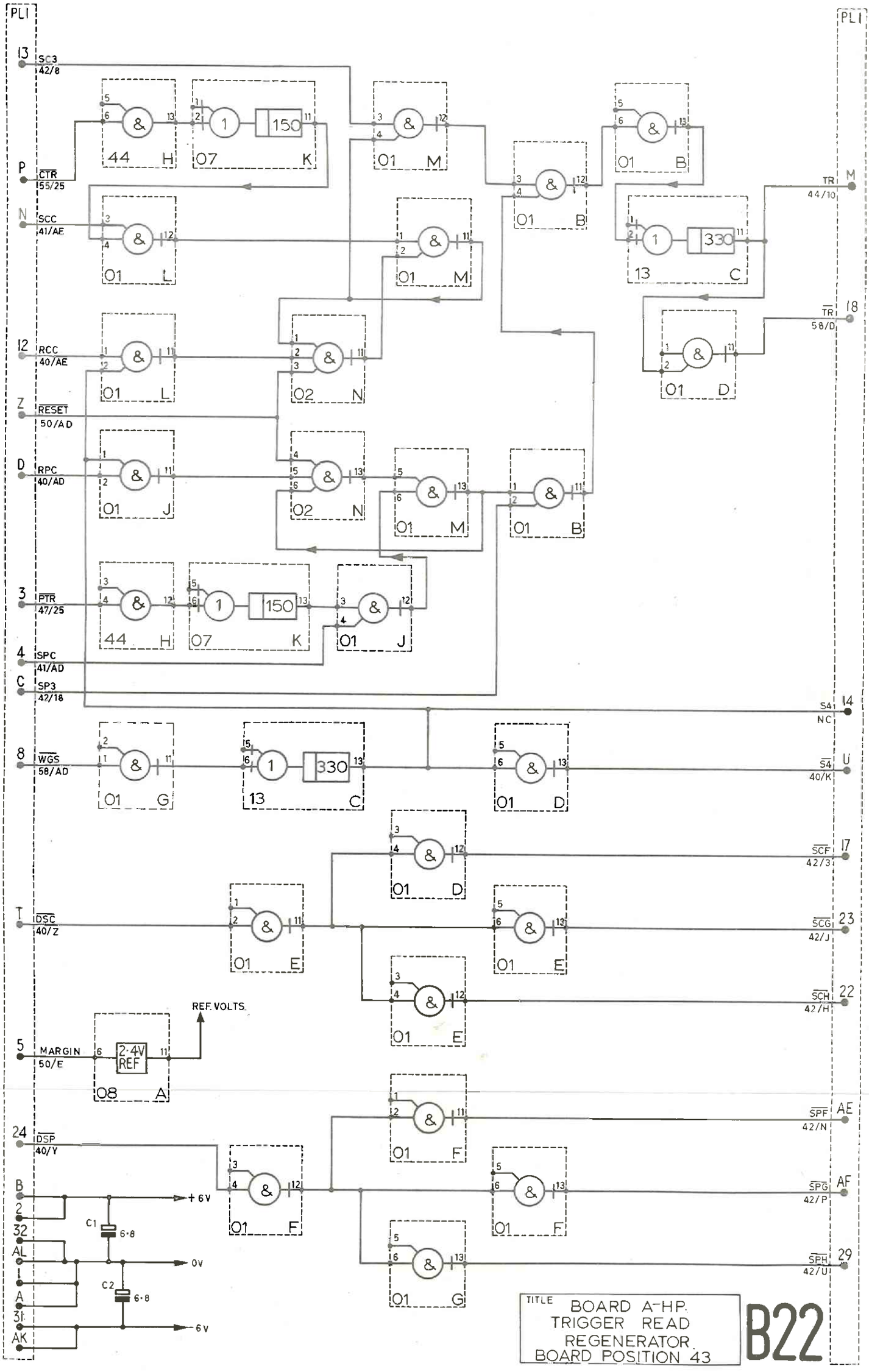
PL1
13 SC3 42/8
P CTR 55/25
N SCC 41/AE
12 RCC 40/AE
Z RESET 50/AD
D RPC 40/AD
3 PTR 47/25
4 SPC 41/AD
C SP3 42/18
8 WGS 58/AD
T DSC 40/Z
5 MARGIN 50/E
24 DSP 40/Y
B
2
32
AL
1
A
31
AK
+6V
0V
6V
C1 6·8
C2 6·8
REF. VOLTS.
2·4V REF
TR 44/10 M
TR 58/D 18
S4 NC 14
S4 40/K U
SCF 42/3 17
SCG 42/J 23
SCH 42/H 22
SPF 42/N AE
SPG 42/P AF
SPH 42/U 29
TITLE
BOARD A-HP.
TRIGGER READ
REGENERATOR.
BOARD POSITION 43
B22