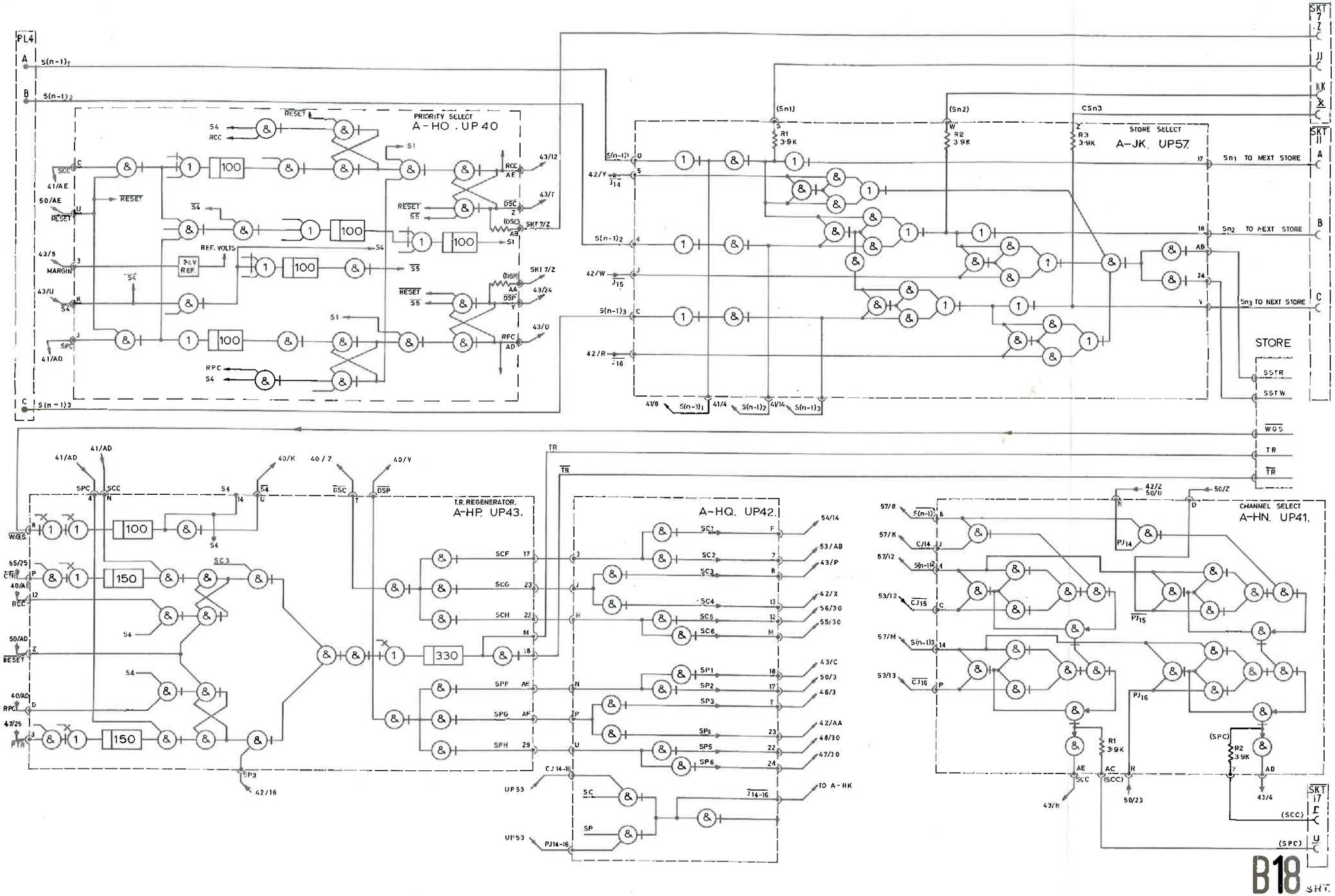
PL4
PRIORITY SELECT
A-HO. UP40
STORE SELECT
A-JK. UP57
Sn1 TO NEXT STORE
Sn2 TO NEXT STORE
Sn3 TO NEXT STORE
STORE
SSTR
SSTW
WGS
TR
T.R. REGENERATOR.
A-HP. UP43.
A-HQ. UP42.
TO A-HK
CHANNEL SELECT
A-HN. UP41.
SKT 7 Z
SKT 11
SKT 17
B18
SHT. 1